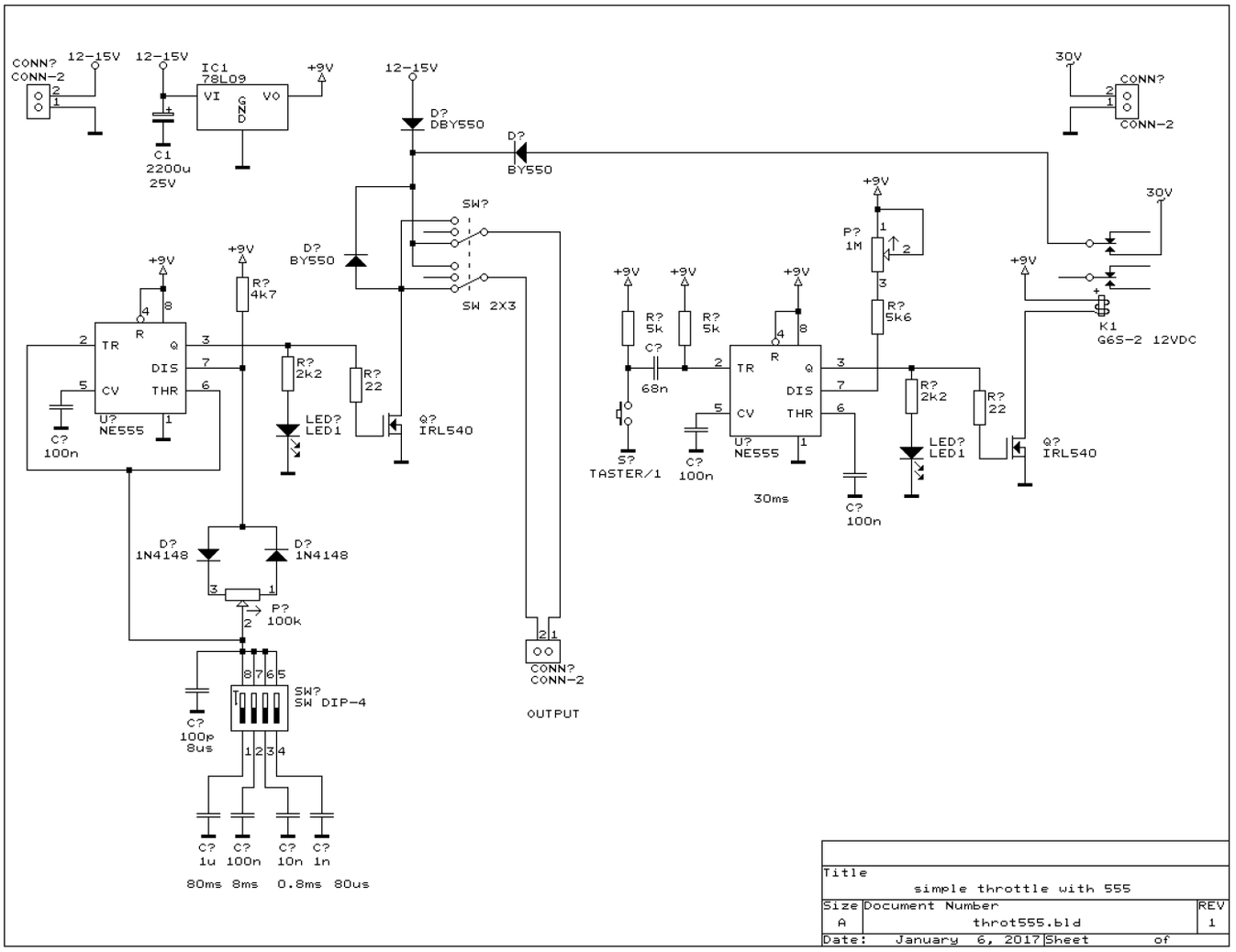

Title	simple throttle with 555	
Size A	Document Number throt555.bld	REV 1
Date: January 6, 2017	Sheet of	