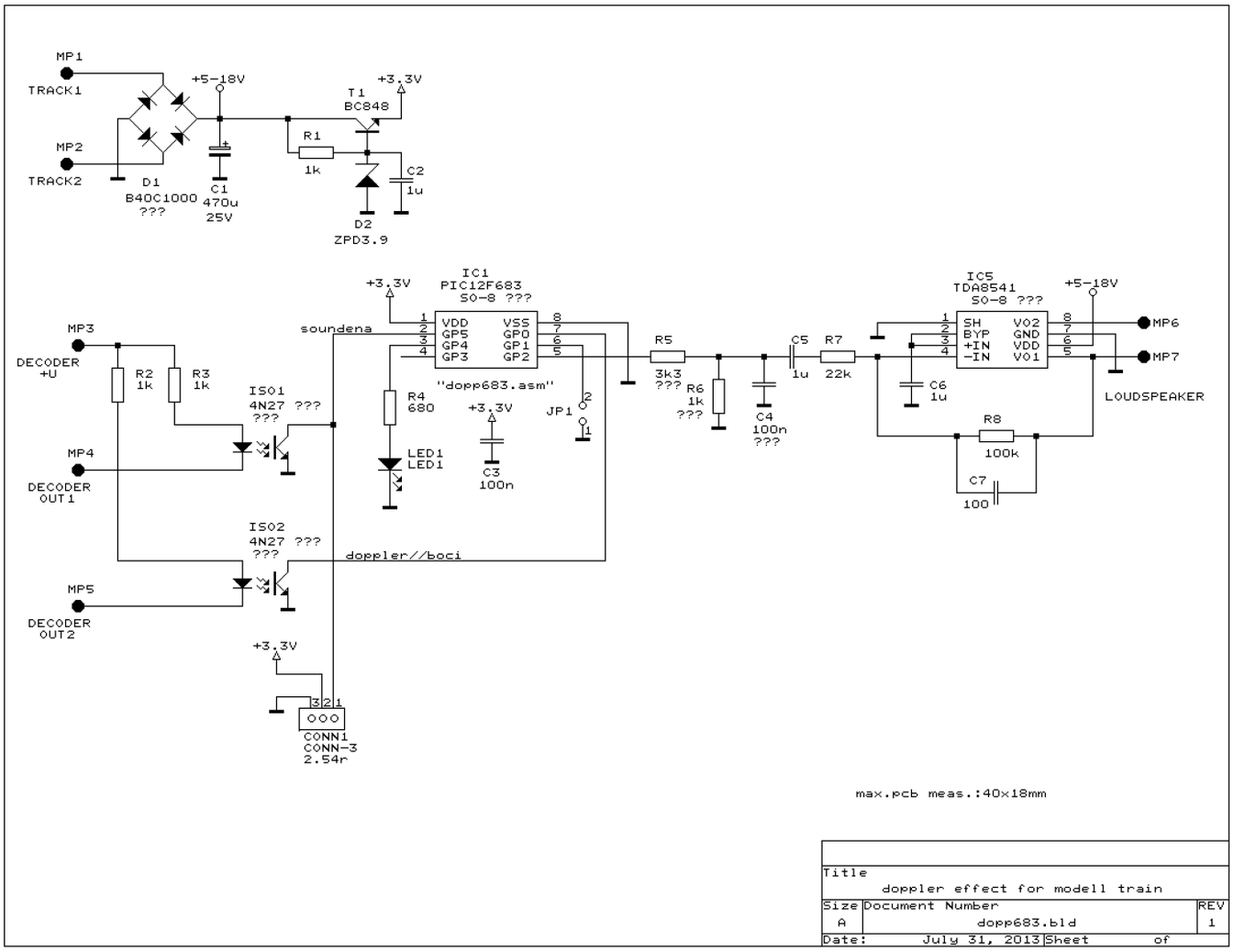

Title	doppler effect for modell train	
Size A	Document Number dopp683.bld	REV 1
Date: July 31, 2013	Sheet of	