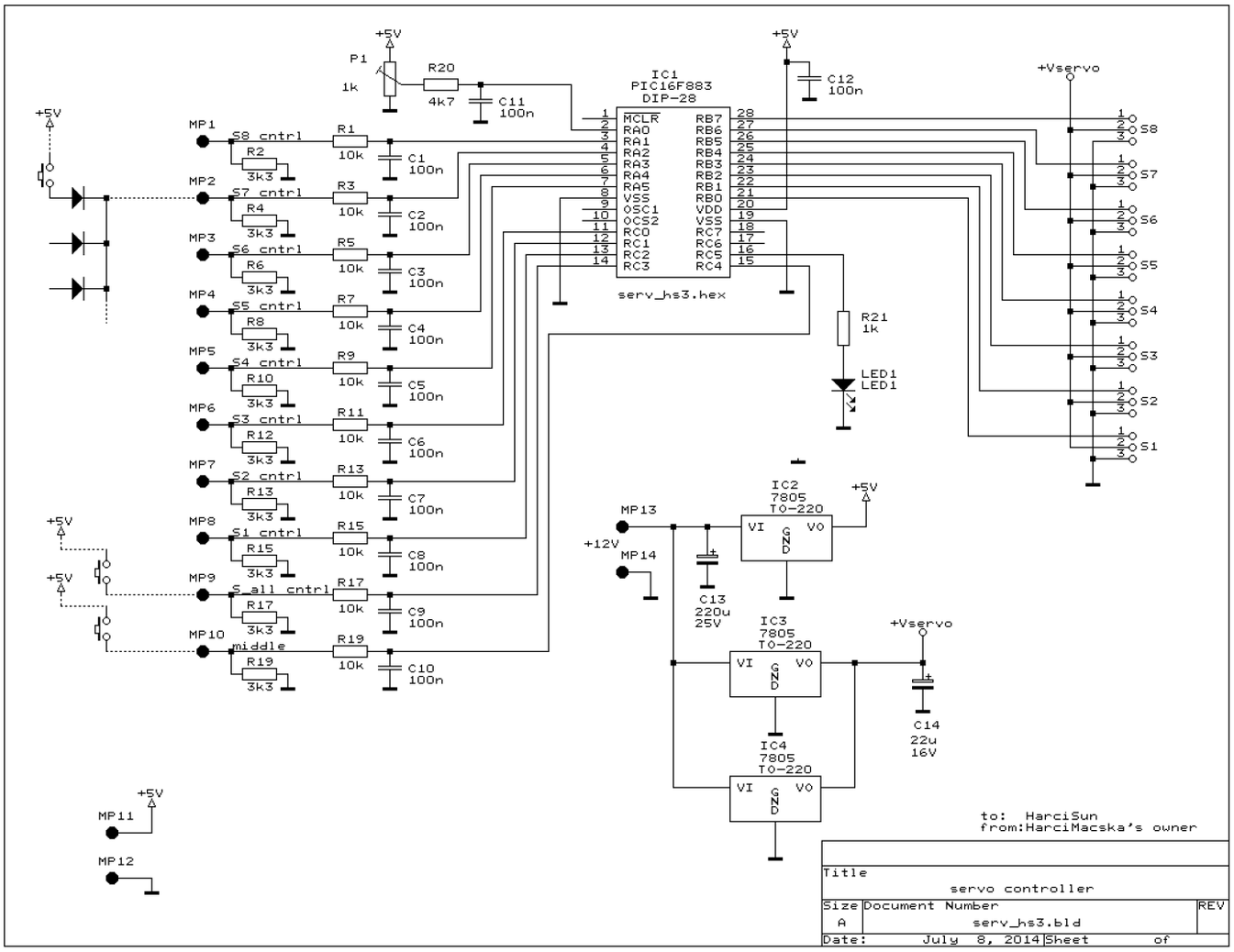
+5V
P1
1k
R20
4k7
C11
100n
IC1
PIC16F883
DIP-28
MCLR
RA0
RA1
RA2
RA3
RA4
RA5
VSS
OSC1
OCS2
RC0
RC1
RC2
RC3
RB7
RB6
RB5
RB4
RB3
RB2
RB1
RB0
VDD
VSS
RC7
RC6
RC5
RC4
serv_hs3.hex
C12
100n
+Vservo
MP1
MP2
MP3
MP4
MP5
MP6
MP7
MP8
MP9
MP10
S8 cntrl
S7 cntrl
S6 cntrl
S5 cntrl
S4 cntrl
S3 cntrl
S2 cntrl
S1 cntrl
S_all cntrl
middle
R1
R3
R5
R7
R9
R11
R13
R15
R17
R19
10k
R2
R4
R6
R8
R10
R12
R13
R15
R17
R19
3k3
C1
C2
C3
C4
C5
C6
C7
C8
C9
C10
100n
S8
S7
S6
S5
S4
S3
S2
S1
R21
1k
LED1
MP13
MP14
+12V
IC2
7805
TO-220
VI
VO
GND
C13
220u
25V
IC3
7805
TO-220
IC4
7805
TO-220
C14
22u
16V
MP11
MP12
to: HarciSun
from:HarciMacska's owner
Title
servo controller
Size
A
Document Number
serv_hs3.bld
REV
Date: July 8, 2014
Sheet of